TECO	OUTLINE DIMENSIONS 3-PHASE INDUCTION MOTOR	FRAME NO : D160

POLE	kW	HP	RPM	FRAME
2	11.00	14.75	2940	D160M1-2
2	15.00	20.00	2940	D160M2-2
2	18.50	24.80	2940	D160L-2
4	11.00	14.75	1460	D160M-4
4	15.00	20	1460	D160L-4
6	7.50	10	970	D160M-6
6	11.00	14.75	970	D160L-6

Totally Enclosed Fan-Cooled Type. Squirrel-Cage Rotor.

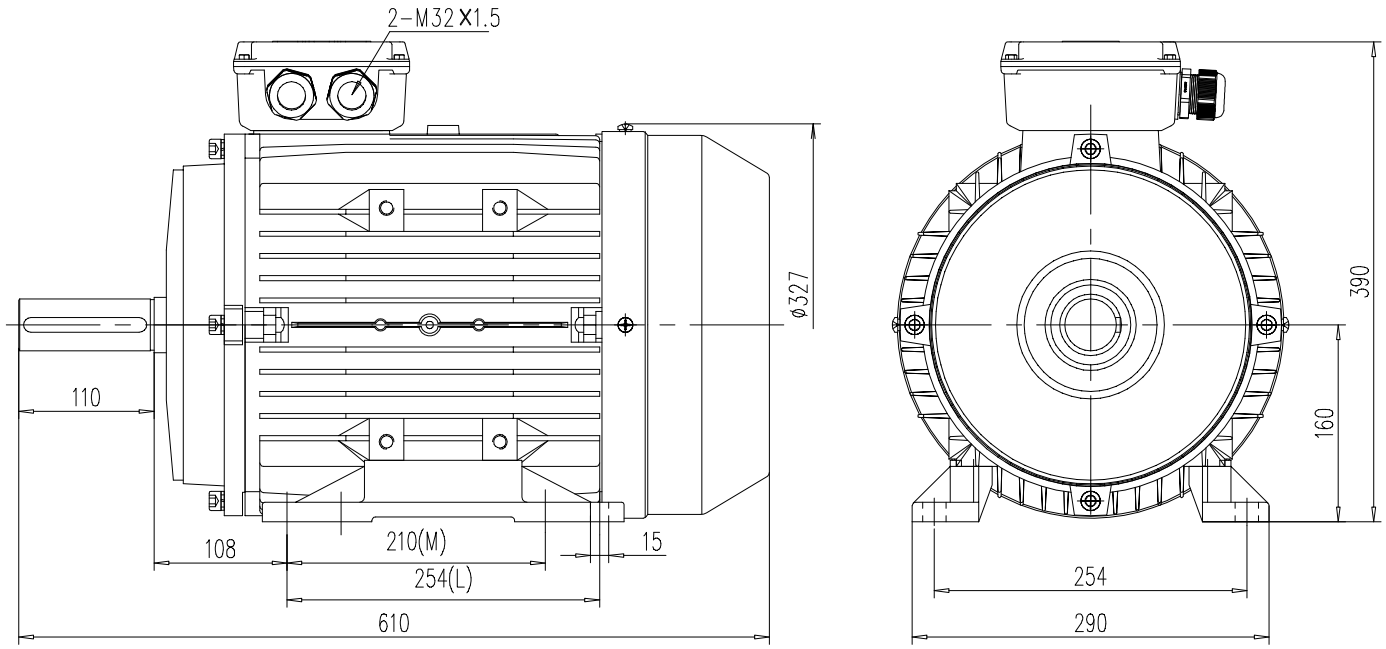

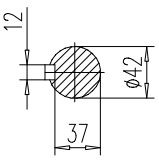

NOTES:
1. DIMENSIONS IN mm.
2. FOOT MOUNTED IM1001.
3. FOR DIRECT DRIVE ONLY.
4. IP55 PROTECTION.

MAX ALLOY

DWN.	DP	16. 12. 24	REV : 00
CHKD.	AN	16. 12. 24	
APPD.	JC	16. 12. 24	